STANDARD PC RANGE

PC-M2H PRODUCT GUIDE

PC-M2H Self Tapping Male - 10kg

The heavy duty self tapping clip, PC-M2H adds to the Standard Range. Specifically designed for thicker panels with increased loading requirements, where PC-M1B is not strong enough, with a 10kg pull out load per clip set. Compatible with all female clips in the Standard Range, and installs into panels with a minimum 8mm thickness.

PC-M2H 10kg

USE WITH:

PC-F1A

PC-RF1

PC-SF1

PC-AF1

MATERIAL:
Black Acetal copolymer

MORE INFO:
Installation Guide PC-F1A, SF1, RF1
Clip Layout Guide TD-02, 09, 12
Panel Offset Guide

BENEFITS

- Self-aligning installation without adhesives
- Perfect panel alignment secure mounting every time
- Remove and refit panels in any sequence 100+ times
- Saves time and reduces cost
- 10kg pull out load per clip
- Allows for flexing and expansion of panel and support frame materials

APPLICATIONS

- Covered or painted panels with minimum 8mm thickness
- Ceiling and wall panels
- Exterior deckhead panels (marine only)
- Refits and upgrades of existing installation
- Variety of substrates

INSTALLATION: Partially exploded through section showing typical installation method

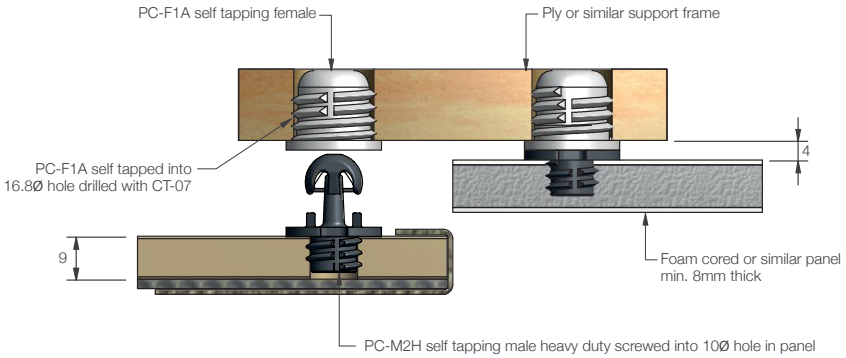

Subject to change without notice.
Version: PC-M2H - 10/23. Copyright © Fastmount Ltd.

FASTMOUNT